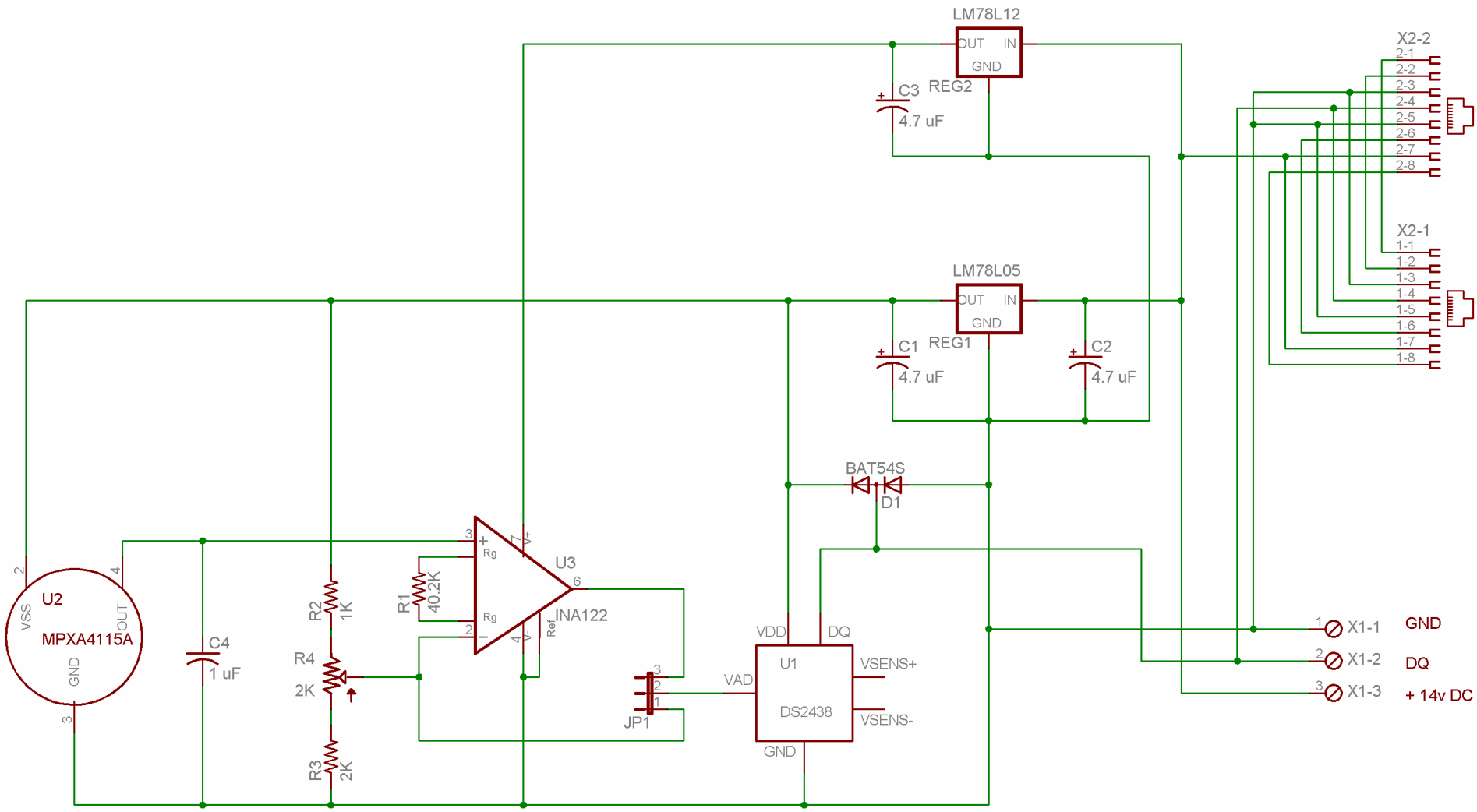

Barometer

Based on Tim Bitson's Design

(c) 2005 Electronic Visions Board by Eric Vickery

TITLE: BitsonBarometer1

Document Number:

REV: 1

Date: 5/01/2005 09:36:38p

Sheet: 1/1